The Cool Sound of Tubes

ERIC BARBOUR
Svetlana Electron Devices Inc.

Although solid-state technology overwhelmingly dominates today's world of electronics, vacuum tubes are holding out in two small but vibrant areas. They do so for entirely different reasons. Microwave technology relies on tubes for their power-handling capability at high frequencies ["Tubes: still vital after all these years," Robert S. Symons, *IEEE Spectrum*, April, 1998, pp. 52–63]. The other area—the creation and reproduction of music—is a more complicated and controversial story.

The complications and controversy stem from the fact that music is played to be heard by human beings, whose nonlinear ear-brain hearing systems are far from fully understood. Since no one knows exactly how to model the human auditory system, no one knows exactly what engineering measurements are appropriate to evaluating the performance of audio equipment. A smidgen of some kinds of distortion may sound worse to the ear than larger amounts of other kinds. So ultimately, the only way to judge audio equipment is by listening to it. Hence the controversy: subjective human perception—especially when flanked by questions of artistic merit—is made to order for arguments and disputation.

Briefly stated, a commercially viable number of people find that they prefer the sound produced by tubed equipment in three areas: musical-instrument (MI) amplifiers (mainly guitar amps), some processing devices used in recording studios, and a small but growing percentage of high-fidelity equipment at the high end of the audiophile market. These areas employ vacuum tubes of the type once known as receiving tubes, but now called simply tubes. Not only has the use of vacuum tubes in these fields defied the semiconductor tide elsewhere, but such use and demand has even surged in the course of the 1990s.

Today vacuum-thermionic devices hold sway over the US $100 million worldwide guitar amp business. One rough estimate shows a 10-percent-per-year growth in demand for tubes used in MI amplifiers and high-end audio since the late 1980s, with no apparent slackening—even during the U.S. recession of 1991–92.

Interestingly, much of the demand for audio tubes derives not from the United States, but from Asia. In Japan, Taiwan, and mainland China, tubed high-end equipment enjoys a powerful cult status, and vintage U.S. and European electric guitars and guitar amps are valued collectors' items.

Why tubes—subjective reasons

The three areas of tube audio tend to be mutually exclusive and appear not to influence each other, even though all three directly involve the production or reproduction of music. It is common to see the same tube types, such as the popular EL34 power pentode, in electric-guitar amplifiers and in high-end stereo amplifiers. Often, too, these disparate products employ similar circuit topologies.

Electric-guitar amplifiers, it is estimated, consume as many as three out of four of the world's production of audio tubes. This is hardly surprising, since the tubed guitar amp seems unshakably enthroned at the top of the rock 'n' roll world. In this case, the use of tubed amplifiers in the early rock of the 1950s and '60s caused their distinctive distortions to become the standard tonal effect for the electric guitarist. A cultural bias formed during those years among U.S. and British musicians in favor of the particular nonlinearities of those amps, which typically were quite simple and had little or no negative feedback to improve their linearity.

As documented in many books on electric-guitar technique; in magazines such as *Guitar Player, Guitar World, Vintage Guitar,* and others; and on Usenet news groups such as alt.guitar.amps, the clipping distortion and other sonic artifacts of '50s-designed tubed amplifiers supply the sonic signature required for a successful guitar amp.

Discussion of an amp's merit frequently hinges on the clipping effect, which is often described as yielding a

ONE OF THE LAST REMAINING TUBE DOMAINS IS IN MUSIC APPLICATIONS, BUT THERE THE DEVICES FLOURISH AND EVEN INNOVATE

PHOTOGRAPHS: NICHOLAS EVELEIGH

Two tubes in one, the Svetlana 6BM8 combines a triode and a pentode in a single glass envelope.

Defining tubes

5AR4: rectifier tube, used to convert high-voltage ac into dc plate power for amplifying tubes. One of the most common rectifier tubes, widely used in early guitar amps and hi-fi amps, it is currently manufactured in China. European designator: GZ34.

6DJ8: commonly used in modern audiophile equipment as a preamp or driver. This dual triode, gain of 35, was originally intended for use at radio frequencies in receiver front-ends and is currently manufactured in Russia and China. European designator: ECC88; special-quality designator: 6922.

6L6: first successful beam power tetrode, introduced by RCA in 1936 and made in numerous versions and variations since then. Suffixes (G, GA, GB, GC, GTY, and so on) refer to later modifications and upgradings of the basic 6L6 devices, which are currently manufactured in Russia (three versions), China (many versions), and Slovakia.

12AT7: dual triode with gain of 70, originally designed for radio-frequency applications. Because it was used by Fender in many of its popular push-pull guitar amps as the phase-splitter section, it became a standard for such use in music amplifiers. It is still manufactured in Yugoslavia. European designator: ECC81.

12AX7: most common preamplifier tube used in guitar amps, high-end audio and professional music equipment. A dual triode, gain of 100, it is still manufactured in Russia, Slovakia, and Yugoslavia. European designator: ECC83.

300B: audio power triode originated by the Western Electric division of AT&T in 1935 and used at first in movie-theater amplifiers, later in regulated power supplies. The original 300B has attracted an audiophile cult, especially in Japan and other Asian countries, so that its street price has risen as high as ¥200 000 in Tokyo, prompting the manufacture of versions in the United States, Russia, China, and Slovakia, specifically for that small market.

5881: rugged version of 6L6 beam tetrode, originally used in industrial and military equipment. Originally made by Tung-Sol Manufacturing Co. (now defunct) and other firms. Old American 5881s are sought-after collectibles. A different version is currently made at the Reflector factory in Saratov, Russia.

6550: beam-power tetrode, introduced in 1955 by Tung-Sol Manufacturing Co. (now defunct). Originally intended as a low-cost audio power tube, capable of as much as 100 W in push-pull pairs, it is popular in hi-fi amplifiers and in very large guitar and bass-guitar amplifiers. It is currently manufactured in Russia and China.

EL34: audio power pentode, introduced in early '50s by the giant Dutch firm, Philips Gloeilampenfabrieken N.V. (Eindhoven, the Netherlands). The EL34 became popular for its use in Marshall guitar amplifiers, as well as in various hi-fi amplifiers of the '50s and '60s. Currently it is being made in Russia (three versions), China (three versions), Slovakia, and Yugoslavia. U.S. designator: 6CA7. (Note: some 6CA7s are actually beam-power tetrodes, not pentodes.)

EL84: miniature power pentode, introduced by Philips in the mid-'50s. It became popular in guitar amps from its use in the Vox AC-30 and was also commonly used in smaller hi-fi amplifiers of the late '50s and early '60s. It is currently manufactured in Russia, China, Slovakia, and Yugoslavia. U.S. designator: 6BQ5.

KT66: beam-power tube manufactured by British firm M-O Valve Ltd., London, from 1937 until 1988. Similar to an uprated 6L6GC, the original KT66 is now a rare collector's item. A version is currently being made in China.

KT77: beam-power tube manufactured by M-O Valve Ltd. from 1957 to 1988. The KT77 was an exact replacement for the EL34, except for its beam-power construction. The original KT77 is now a rare collector's item. A version is currently being manufactured in China.

KT88: beam-power tube manufactured by M-O Valve Ltd. from 1957 to 1988. The KT88 was an exact replacement for the 6550, except for its higher plate ratings. The original KT88 is now a rare collector's item. Versions are currently being manufactured in China and Slovakia; a Russian version is due shortly.

sound like a brass wind instrument. The saturation distortion of the output transformer, which couples the power tubes to the speaker, also plays a key role in determining an amplifier's sound. Another amplifier parameter—its touch sensitivity—is affected by circuit nonlinearities and loose regulation of the plate-power supply.

Tubes have also been cited, albeit not without controversy, as facilitating a controlled so-called infinite sustain effect because of the way their signal compression interacts with acoustic feedback from speaker to guitar string. These effects are well-known among musicians, yet seem difficult to reproduce accurately with solid-state equipment. The many designers who have tried to build tube simulators over the past 30 years have achieved varying levels of musical and financial success. Such equipment has its supporters, but most amateur and professional guitarists remain faithful to tubed amplifiers.

As Ritchie Fliegler, vice president of marketing at Fender Musical Instruments Corp., Corona, Calif., said in a private letter last year, "This is not even a topic for discussion as far as I'm concerned...there is no substitute for tube electronics in the hearts and minds of pros."

This kind of thinking has influenced the professional-audio world of recording and mixing equipment. Since 1985, some studio engineers have been attracted by what they perceive as the "soft" and "euphonic" sound of vacuum-tube electronics—probably because of their experiences with vintage tubed amps, since modern tubed amps can be and are made without these characteristics. Tube enthusiasts usually contrast the soft sound of tubes with the harsh sound of modern digital recording and mixing, which may have more to do with the use of electrolytic coupling capacitors and inexpensive op-amp ICs than with solid-state devices in themselves. Regardless of the validity of their reasoning, studio engineers began experimenting with old tube-equipped condenser microphones, preamps, limiters, and equalizers from the 1946–70 era. The result has been twofold: street prices for vintage tube equipment have skyrocketed, and numerous small companies have sprung up to manufacture tube-equipped devices, following a variety of design practices.

Why tubes—objectively

If cries of fraud and derisive comments about "magical sound" sometimes greet the use of tubes in audio equipment, there are also highly competent electrical engineers who see definite advantages in tubed equipment. An example is John Atwood, consulting engineer and owner of One Electron Co., Santa Clara, Calif. The erstwhile designer of application-specific ICs and other solid-state logic circuits has managed to transform his hobby of tube audio design into a full-time consulting business.

In Atwood's opinion, "Some of the differences in the audio qualities between tubes and transistors have to do with the inherent physical properties of the devices and with the circuit topologies and components used with each type of device. There is no way around it: linear [triode] vacuum tubes have lower overall distortion than bipolar transistors or FETs, and the distortion products are primarily lower-order...the clipping characteristic of tubes is actually not much softer than transistors, but feedback tends to 'square-up' the clipping. Thus, the heavy feedback in most solid-state designs gives them worse overload performance.

"A low- or no-feedback design can be driven harder without audible distortion," Atwood continued. "High feedback also can lead to transient intermodulation distortion (TIM), caused by clipping or slew-rate limiting within the feedback loop." [See table on p. 29 for a comparison of the attributes of tubes and transistors in audio applications.]

Clipping distortion is not the only issue. In semiconductors, the shift of characteristics with temperature along with their relatively low maximum operating temperature has led to extensive use of Class-B amplifiers to keep power dissipation down. In many designs, the result has been audible crossover distortion, which often does not show up in published specifications. Those specs are typically based on measurements made at full power, where crossover distortion is at a minimum. Consumer tube amplifiers use Class-A or Class-AB designs, which have vanishingly low distortion even at low signal levels.

Another audio expert—Bruce Rozenblit, the owner of Transcendent Sound Co., Kansas City, Mo., and a well-known designer of tubed amplifiers—said he sees the output transformer as a major factor behind tube sound: "The warmth is created by a large component of second-order distortion, and the slow rise time of the output transformer causes a coloration that I would describe as a smoothing effect...the transformer is a nonlinear element that causes alterations of the signal in the time and frequency domains, thereby altering the sound."

Bill Whitlock, the president of Jensen Transformers Inc., Van Nuys, Calif., has a similar view. "Much of the perceived advantage of tubes is actually due to the transformers which often accompany them," he said. "Harmonic distortions tend to be rather high—1 percent or more is common—but are almost entirely low order (second and third harmonics). Transformer distortions are frequency-dependent in a way that most electronic distortions are not. Intermodulation (IM) distortions are created when a low frequency modulates the gain of a high frequency passing through the channel at the same time. The ear is much more sensitive to these IM distortions than to total harmonic distortion (THD). For electronic distortions, one normally expects IM to be three to four times the THD. In transformers, however, IM is actually about a third to a quarter of the THD."

Speaking about solid-state designs, Whitlock asserted that they "...depend on huge amounts of negative feedback to 'fix everything', including crossover distortion. Op amps commonly have open-loop THD in the 20 percent to 70 percent range. Stabilization generally requires open-loop gain to fall at 6 dB per octave. This means that, for ultrasonic input signals, the op amp has little gain margin to fix its own distortion. The ultrasonic signals, along with distortion products, are fed to the next stage for further distortion and intermodulation. This intermodulation creates audible, but nonharmonically related, artifacts which contaminate the noise floor and mask many subtle features of the music."

Widely used in guitar amplifiers, the octal-based Svetlana EL34 power pentode features a graphite-coated screen grid and a gold-plated control grid.

Whereas many analog-circuit designers today appear to feel that tubes are inherently noisy, Atwood disagrees. "In the audio region, 1/f noise tends to dominate over shot noise—it varies considerably from device to device," he observed. "You need to select devices for low 1/f noise. ... Microphonics, though, are a problem [with tubes]."

Whitlock said he saw things somewhat differently: "Higher operating voltages can expand one end of the dynamic-range envelope, but for audio, tubes are generally noisier (without the help of transformers) at the other end." Atwood qualified this statement with the comment that it is true only for low-impedance, low-level sources such as some (noncapacitive) microphone elements.

In addition to the active devices themselves, the passive components customarily used with them apparently also favor tube designs. According to Atwood, the low impedances of bipolar transistors necessitate the use of large (high-value) coupling capacitors, which for the most part means electrolytics. High dielectric absorption, imperfect high-frequency characteristics, and aging of electrolytics put them at a sonic disadvantage compared with the good-quality film capacitors nearly universally used for coupling the stages of tubed amps. "While it is possible to build solid-state amps with no electrolytics, it is rarely done," he said.

Whitlock said he felt that the main problem with electrolytics is actually at low frequencies: "The major problem with electrolytics is dielectric hysteresis, which produces high THD at low frequencies, where there are ever-increasing voltage swings across the capacitor." He also stated that direct coupling is the most desirable scheme, whether semiconductors or tubes are used.

Parallel views are held by guitar-amp designers. As Rick Perrotta, a longtime recording engineer and cofounder of guitar-amp manufacturer Matchless Amplifiers, Santa Fe Springs, Calif., explained, when a transformer saturates, it has a compressing effect. "When someone says that a particular guitar amplifier has a big fat sound, that is due, in part, to the output transformer saturating along with the output tubes. Solid-state amps can't perform that trick."

Guitar amp origins

It was in the '30s that the idea of attaching a transducer, amplifier, and loudspeaker to a guitar first caught on. Early guitar amps were used primarily with lap guitars, usually made of solid wood or metal with no resonant body to increase volume. Later amps were adopted by big-band guitarists, and in the '50s, amplifiers became pretty much mandatory for the amalgam of blues, country music, and jazz known as rock 'n' roll. Since transistors did not enter wide usage until about 1960, all of the originating styles of rock guitar were developed on tube amplifiers. Later,

Defining terms

Black-plate: usually refers to the 6L6GC power tube having a shiny black coating on its plate and formerly manufactured by RCA Electron Tubes Division in its Harrison, N.J., plant. Now a rare collectible, it is much sought after by guitarists for its unique "hazy" tone, due to unusual cathode and other materials. A few other RCA-made tubes, such as the 5687 and 5751 dual small-signal triodes, were also black-plate types.

DI (direct input) box: an interface device for connecting an unbalanced audio signal to the balanced input of a professional mixing console. Some DI boxes are entirely passive and provide zero signal gain, while others incorporate tubed or solid-state preamplifiers.

Head: a separate guitar amplifier chassis in its own cabinet, used with a separate speaker cabinet. A guitar amp built into a single cabinet with a speaker is known as a combo amp. The separate head and speaker give maximum flexibility and keep tubes away from vibrations produced by speakers.

Microphonics: changes in electrical characteristics of a device traceable to mechanical vibration; it causes the vibration waveform to appear in the device's output signal, hence it is a type of noise.

New old stock (NOS): a term borrowed from antique collectors to describe a tube or other component no longer being manufactured and found unused in its original factory packaging.

Smooth plate: colloquial name for Telefunken's original version of the 12AX7/ECC83 dual triode, which has large plates with no embossed features. The tube has not been manufactured since the '70s and is now much in demand for use in guitar amps and other audio equipment.

Tolex: brand name for a plastic-coated fabric covering used on U.S. guitar-amplifier cabinets in the '50s and '60s.

Touch sensitivity: a term used by electric guitarists to describe some kinds of signal-compression effects, usually caused by loose power-supply regulation or clipping distortion in a guitar amplifier. Such effects make the signal volume change greatly with the "touch" or force applied to the guitar strings by the player

Tweed: refers to guitar amplifiers made by Fender Musical Instruments through the '50s, so called because of the tweed-like, yellow-tan fabric covering their wooden cabinets.

musicians discovered that using a gain device before the guitar amp forced the amp to clip heavily; they liked the resulting sound, and it became the foundation of hard rock, later called heavy metal.

Since all the past styles of guitar playing are still regarded as musically valid, the market for guitar equipment has fragmented. Various manufacturers offer arrays of amplifiers, preamps, effects processors, and other means of electronically processing the guitar signal. Both reproductions of early equipment and innovations are available. Most remarkably, the basic designs of tube guitar amps tend to be based on a few prototypes that date from the '50s or early '60s. Extra channels or gain stages are added, tone controls are modified, sound effects (like reverberation and electronic tremolo) vary, and speaker cabinets become available in various configurations. Yet the basic circuits keep returning to the same set of paradigms.

No manufacturer of guitar amps has been as influential as Fender. Between 1946 and 1965, founder Leo Fender and his design team created most of the rock guitar sound in the form of the amplification used with their solid-body guitars, such as the famous and widely-copied Stratocaster model.

The most primitive design for a Fender amp is the Champ model. Being intended as a low-cost amplifier for students and beginners, a typical Champ uses a single 6V6GT or 6L6GC power tube. Because of its single-ended power stage—and the large amount of second-harmonic distortion thereby engendered—the Champ had a sound often described as "soft" and "lush." The amp's small, cheap output transformer saturated easily and gave very poor low-frequency response. Early Champs used 6V6GTs, were extremely primitive, and had no feedback, while later models had more complex circuits and loop feedback. In spite of their crudeness, early Champs are now valuable collector's items, and have been much imitated in recent years. The Champ sound is a standard, typical of many low-cost amps used on early rock 'n' roll records.

The most popular Fender models among serious professionals are the Bandmaster, Twin, Showman, and Bassman with push-pull 6L6GC or 5881 output tubes. The tone of these models has a ringing quality much sought after. The peculiar distortions from these amps and their matching speakers, in addition to the inherently light regulation afforded by tube rectifiers, gives distinctive inherent compression effects. This combination is what makes possible the infinite sustain effect mentioned earlier.

Even though the Bassman was intended originally for bass guitar, it was widely used for lead guitar and became possibly the most copied guitar amp in history, especially the 1959 model equipped with four 25-cm speaker drivers. The Twin Reverb model is often modified with extra gain stages for more distortion, producing a fair degree of compression and allowing the lengthy sustain of guitar notes. It served as the prototype for many modern amps with complex preamp sections.

Starting in 1962, a new sound appeared in Britain. Jim Marshall, a London music dealer, found that imported Fender amps were popular but too expensive, and so he developed his own. While his first amp was a copy of the Bassman, he later changed the output tubes to push-pull EL34s. These European tubes were true pentodes, different in electrical behavior from the beam tetrodes used in Fender amps. With the new tubes, Marshall's amps took on a tone described as very distorted and "crunchy," which is now considered the classic British blues-rock sound. Interestingly, the EL34 had reliability problems when operated in deep clipping for long periods, so in the '70s the U.S. distributor for Marshall amps switched the output tubes to 6550 beam tetrodes. As the sound of these amps was much more like very powerful Fenders, some preference arose among U.S. musicians for a "harder" sound than Marshalls give with EL34s. New distribution in the 1980s had EL34-equipped Marshalls entering the United States, as Jim Marshall preferred.

The third common guitar-amp design is that of the models AC15 and AC30 made by Vox Amplification Ltd., London. These were often used in Britain and throughout Europe, most notably by the Beatles at the peak of their popularity. The AC15 uses two push-pull EL84 output tubes, the AC30 four EL84s. Both models use self-bias of the output tubes, in Class A operation and with no negative feedback, unlike many other push-pull guitar amps. The result is a unique tone that varies greatly with string-plucking force. AC30s were made available with a Top Boost option, adding gain stages for further versatility. The Top Boost AC30 design is widely imitated by modern amp designers.

Bass guitar amplified otherwise

A bass guitar has different needs from a lead guitar. Bass is used to reinforce the song rhythmically, working with the melody at a pitch several octaves below. Nearly all bass guitars are solid-body types—simply larger versions of regular electric guitars with very thick strings. Since the bass sound is not always assisted by distortion, solid-state designs have come to hold sway over this market. Any amp with a high damping factor and capable of generating high powers at low frequencies can serve as a bass amp. Yet a ground swell of interest in tubed bass amplifiers has surfaced since 1990.

Vacuum tubes and transistors compared

Vacuum tubes: advantages

- Highly linear without negative feedback, especially some small-signal types.
- Clipping is smooth, which is widely considered more musical than transistors.
- Tolerant of overloads and voltage spikes.
- Characteristics highly independent of temperature, greatly simplifies biasing.
- Wider dynamic range than typical transistor circuits, thanks to higher operating voltages.
- Device capacitances vary only slightly with signal voltages.
- Capacitive coupling can be done with low-value, high-quality film capacitors.
- Circuit designs tend to be simpler than semiconductor equivalents.
- Operation is usually in Class A or AB, which minimizes crossover distortion.
- Output transformer in power amp protects speaker from tube failure.
- Maintenance tends to be easier because tubes can be replaced by user.

Vacuum tubes: disadvantages

- Bulky, hence less suitable for portable products.
- High operating voltages required.
- High power consumption; needs heater supply.
- Generate lots of waste heat.
- Lower power efficiency than transistors in small-signal circuits.
- Low-cost glass tubes are physically fragile.
- More prone to microphonics than semiconductors, especially in low-level stages.
- Cathode electron-emitting materials are used up in operation, resulting in short lifetimes (typically 1–5 years for power tubes).
- High-impedance devices that usually need a matching transformer for low-impedance loads, like speakers.
- Usually higher cost than equivalent transistors.

Transistors: advantages

- Usually lower cost than tubes, especially in small-signal circuits.
- Smaller than equivalent tubes.
- Can be combined in one die to make integrated circuit.
- Lower power consumption than equivalent tubes, especially in small-signal circuits.
- Less waste heat than equivalent tubes.
- Can operate on low-voltage supplies, greater safety, lower component costs, smaller clearances.
- Matching transformers not required for low-impedance loads.
- Usually more physical ruggedness than tubes (depends on chassis construction).

Transistors: disadvantages

- Tendency toward higher distortion than equivalent tubes.
- Complex circuits and considerable negative feedback required for low distortion.
- Sharp clipping, in a manner widely considered non-musical, due to considerable negative feedback commonly used.
- Device capacitances tend to vary with applied voltages.
- Large unit-to-unit variations in key parameters, such as gain and threshold voltage.
- Stored-charge effects add signal delay, which complicates high-frequency and feedback amplifier design.
- Device parameters vary considerably with temperature, complicating biasing and raising the possibility of thermal runaway.
- Cooling is less efficient than with tubes, because lower operating temperature is required for reliability.
- Power MOSFETs have high input capacitances that vary with voltage.
- Class B totem-pole circuits are common, which can result in crossover distortion.
- Less tolerant of overloads and voltage spikes than tubes.
- Nearly all transistor power amplifiers have directly-coupled outputs and can damage speakers, even with active protection.
- Capacitive coupling usually requires high-value electrolytic capacitors, which give inferior performance at audio-frequency extremes.
- Greater tendency to pick up radio-frequency interference, due to rectification by low-voltage diode junctions or slew-rate effects.
- Maintenance more difficult; devices are not easily replaced by user.
- Older transistors and ICs often unavailable after 20 years, making replacement difficult or impossible.

Early bass amps, such as Fender models, were essentially little different from guitar amps. Then the Ampeg SVT was introduced in 1969. It dwarfed previous bass amplifiers, producing 300 W from six 6146 or 6550 tubes. The SVT became a standard much imitated, especially in the last 10 years. Modern tube bass amps are usually very large, producing 200 W at least from a set of 6550 beam tetrodes—as many as 10 in some models.

Professional audio gear

For all that guitar and bass amps are targeted at professional musicians, they are often considered somewhat apart from the professional audio market. The usual definition of "pro audio" specifies sound-reinforcement and sound-recording equipment. Each kind is used both in a live musical setting and in the recording studio, yet they are somewhat differentiated by application. For stage use, ruggedness and reliability matter the most. In the studio, though, there is more concern about the specifics of the device's transfer function, which may be exploited as a sound effect.

The most general use of vacuum tubes in the recording studio is inside condenser microphones, used to record vocals. Each microphone model has its own transducer assembly or "capsule" design, each having distinctive variations in frequency response, phase shift, and signal distortion. Even the finest and most carefully designed capsules are not exactly perfect, so recording engineers have learned to exploit the imperfections artistically.

The advantage of tubes in condenser microphones is their very high input impedance, which does not load down the capsule significantly. Many recording professionals agree that the soft clipping exhibited by the tube—along with its high-voltage operation—can also be important, since some singers have very powerful voices, capable of producing peaks far beyond the dynamic range of typical solid-state electronics.

Almost as much the rage as tubed microphones are special preamps and so-called direct input boxes, which in studio signal chains serve to provide voltage gain, impedance conversion, and (in the case of direct input boxes) conversion from unbalanced to balanced connections. In spite of their lesser usage in studios, compared with tubed condenser microphones, these preamp devices are also riding high on a resurgence of popularity. Among the best-liked designs of this category are units that are solid-state but for a single 12AX7 tube operated at a very low plate voltage—as little as 12 V. This so-called starved-plate operation delivers high distortion, which some equipment designers consider the only useful characteristic of vacuum tubes in audio.

Expensive yet much favored is a category of tube preamps that are a lot like classic circuits from the '50s and '60s. This would include products from Tube-Tech (TC Electronic A/S, Risskov, Denmark), Anthony DeMaria Laboratories (ADL),

New Paltz, N.Y., and Manley Laboratories, Chino, Calif. The standard design involves push-pull circuits, frequently using 12BH7 or 12FQ7 dual triodes along with 12AX7s and 12AU7s. Input and output coupling transformers, to match impedances of 600-Ω lines to the tube circuits, are found in these devices, in spite of the difficulties of making high-quality audio transformers.

A key use of tubes in the recording chain is in signal compressors, also called limiters or leveling amplifiers. In general terms, a high-quality audio compressor consists of a preamp, a so-called sidechain with audio-signal rectifier and peak detector, and a voltage-controlled attenuator or amplifier driven by the peak-detected voltage. The control is arranged so that signal gain in the preamp rises as the signal level on the input falls, giving a narrowed dynamic range. Compressors of this type are considered mandatory in recording and production studios, for a variety of sonic effects. Rock music is often heavily compressed to give the illusion of greater loudness.

Tube compressors tend to follow the examples of vintage equipment. Among the most influential was the Teletronix LA-2A, in which a controlled attenuator, consisting of an electroluminescent panel driven directly by the tube peak detector, shone onto a light-sensitive cadmium-sulfide resistor. Such devices have compression ranges of at most 10:1—not large compared with the enormous compression ratios available with modern solid-state designs.

The limitations of the tubed compressors have apparently not affected their value. LA-2As known to sell for $4000 on the street today were worth perhaps $100 in 1980. Whereas all the makers of vintage compressors are currently out of business or no longer producing such equipment, most of the modern firms produce compressors, ranging from starved-plate types (Aphex Tubessence) to vintage-style designs.

A tube compressor of modern design is the Summit Audio DCL-200, a dual compressor of hybrid design. Its input and output circuits, as well as the peak-detecting sidechain, are solid-state, while 12AX7s are used for signal amplification.

A similar situation exists with outboard audio equalizers (EQs). Essentially complex tone controls, dedicated EQs are viewed as adjuncts to the EQ circuitry built into the channel modules of modern mixing boards. Many of the above companies also have tube-equipped EQs in their lines. Often they are based on classic designs by long-defunct firms, such as Pultec and Lang. The tube EQs often use passive RLC filters, buffered on the input and output with tubes, whereas active filters are the usual basis for modern solid-state EQs. The Summit Audio EQP-100, manufactured since 1985, uses tube gain sections and passive RLC filters combined with input-output drivers based on op amps using discrete transistors.

Other specialized areas in which tubes find application include mixers and rotating-speaker tremolo devices. The latter, pioneered in the '40s by Leslie, have remained in favor for their distinctive phasing sound. Leslie speakers are considered essential for use with the Hammond B-3 electric organ, a standard instrument for rock and jazz music for 40 years. In point of fact, Leslie speakers with tube amplifiers are still being manufactured by Hammond Suzuki Corp., Addison, Ill., while Motion Sound Inc., Salt Lake City, Utah, has introduced rotating-speaker devices that incorporate tube-based electronic circuitry.

High-end equipment

Perhaps the oddest subgenre of tube audio is the high-end audio component market. High-end equipment is aimed at the most obsessive audiophiles, famed for worrying about small details which most people ignore or cannot even hear. Yet in spite of its obscurity and its notorious marketing-driven focus, high end is the most vibrant and active area of all.

Until recently, the high-end market belonged almost entirely to solid-state equipment. The use of tubed equipment in the field started as a semi-nostalgic subculture, with the use by audiophiles of vintage hi-fi amplifiers from before 1970. Unlike users in the music performance market, audiophiles have often preferred tubes for their clean, smooth sound—in some cases, far more detailed and life-like than most early solid-state equipment.

Manufacturers of new tube equipment like Audio Research Corp., Minnetonka, Minn., and Conrad-Johnson Design Inc., Fairfax, Va., appeared during the '70s. The field was small and sedate until the late '80s, when interest (and the number of manufacturers) began to skyrocket.

Whereas the hi-fi market originated after World War II in the United States and Europe, the latest aggressive rise in high-end sales has been concentrated in the Asian countries, led by Japan. Much of the high-end equipment made in the West is exported and sold in the Far East. Indeed, Asian audiophiles see labels reading "Made in USA" and "Made in England" as badges of status and quality.

The rise of high-end sales was influenced by the statements of subjective audio reviewers, whose nontechnical and rarely rigorous listening tests at times encouraged near-hysteria among magazine readers. A positive review in a powerful magazine such as *Stereophile* can trigger hundreds or even thousands of unit sales, and turn an unknown manufacturer into an instant success. A negative review can sink a small firm just as easily (and has done so). This applies only to the small North American market. In Asia, terms such as "audio nut" and "audio mania" are often applied to the users and makers of high-end equipment. In Japan alone, the market for tube equipment could easily be five or 10 times as large as in the United States, the source of much of the equipment. The high-end market in Asia seems much more chaotic and ill-defined than elsewhere, with many audiophiles choosing to construct their own equipment from scratch, using a wide variety of tubes and/or semiconductors.

The demand for high-end tube gear in Asia has been fueled, to an even greater degree than in the United States, by an obsession with obscure sonic characteristics. Starting in 1973, Japanese "audio maniacs" were exhorted to seek out the primitive Western Electric 300B audio triode, originally used in late-'30s movie theater amplifiers. Similar edicts were issued about other antique Western Electric tubes, such as the 205D and 212E, and about '30s Western Electric amplifiers and loudspeakers. And hi-fi components made in the '50s and early '60s, by highly regarded firms such as Marantz America Inc., Roselle, Ill., and McIntosh Laboratory Inc., Binghamton, N.Y., enjoy cult status in Asia. Such obsessive desire has driven the street prices of some vintage audio to many times their original retail prices, and has caused Marantz and McIntosh to reissue some of their past models of "obsolete" tube hi-fi components.

Much of high-end is conducted in a gold-rush fashion, with companies advertising exotic connecting cables and acoustical treatment devices while making wild claims about the supernatural results achieved. The result: negative comments from the professional engineering fraternity. Items have been published in the *Journal of the Audio Engineering Society*, in electronic-industry journals such as *EE Times*, and elsewhere that attack the methods and conclusions of the audiophiles. In spite of the bad press, high-end audio was estimated in a *Wall Street Journal* article in December 1991 to sell as much as $1 billion per year worldwide, enjoying a 20 percent annual growth rate. Japan, alone, consumes $200 million per year in high-end components.

Some influence may be exerted on high-end sound by the pro-audio world. Most audiophiles appear to be between the ages of 30 and 50, and thus have been exposed to rock guitar since childhood. Perhaps more to the point, the growth of sales of tubed equipment was also facilitated by the availability of low-cost Russian, East European, and Chinese tubes. Like the guitar and pro-audio areas, high end has expanded most since 1985, about when these tubes first started to appear on the market in large quantities throughout the United States, Western Europe, and the Far East. At the same time, receiving-tube manufacture in the West has virtually ended because of the comparatively small market.

Like the guitar world, high end is hardly a monolithic market. Demand for tube amplifiers has split into three pieces, with audiophiles choosing their preferred design topologies from a list. Designers in the field usually subscribe to only one of these topologies, and battles between the camps flare up regularly. Not so long ago, nearly all high-end tube amplifiers were of conventional classic hi-fi design, using push-pull 6550s or EL34s with negative feedback of 20 dB or less. Audio Research and Conrad-Johnson are among the largest builders of these types.

In recent years, however, the field has seen the rise of the single-ended amplifier. Most of this started in Japan, with the preferred design using one or two primitive power triodes and no feedback. Distortion is substantial, though mostly second-harmonic in nature. Power output tends to be low, necessitating the use of efficient speakers. A parallel phenomenon has been the return to favor of highly efficient horn speakers, which were scorned as too "colored" or inaccurate by audiophiles—until single-ended amps became trendy. An example of a single-ended triode amplifier is the Moth Audio 304TL.

The third and least-used design is called output transformerless (OTL). Driving a low-impedance speaker directly is difficult with tubes, calling for many low-impedance triodes or tetrodes in push-pull sets. Nonetheless, some audiophiles consider the elimination of the output transformer, with its electrical nonlinearities, to be worth the effort.

A modern OTL is the Transcendent Sound amplifier, which uses eight EL509 power tetrodes to produce 80 W into an 8-Ω speaker load and is one of the few modern tube audio devices to be covered by a U.S. patent. Transcendent's Rozenblit feels that the output transformer is fine for guitar amps but not for high-fidelity: "The warmth is gone, the detail and resolution are much greater, and the rise time is much faster...[yet] I cannot duplicate the...sound with solid-state devices that is generated by my OTL. I wish I could, because I could sell 100 times as many units."

Choosing a tube

It is obvious that tube-audio designers like to use tubes from the same small group of types. In guitar amps, preamp and output tube choice are usually dictated by old Fender/Marshall/Vox designs. Preamp stages are made of 12AX7s; phase splitters and drivers are 12AX7s or else 12AT7s; and output tubes are from one of five families: 6L6GC, 6V6GT, EL34, EL84, and 6550.

For example, when Matchless amps arrived in the late '80s, their use of EF86 low-noise pentodes in their input stages befuddled musicians; the amps eventually proved themselves and came into vogue, in spite of the unexpected tube lineup. In professional audio, the standard choices are not fully settled. Vintage-style equipment uses 12AX7s, 12AU7s, 12AT7s, and 12BH7s, sometimes 12AY7s and a few others. Low-cost equipment opts for the 12AX7 because of its ready availability, since it is the most popular preamp tube in guitar amps.

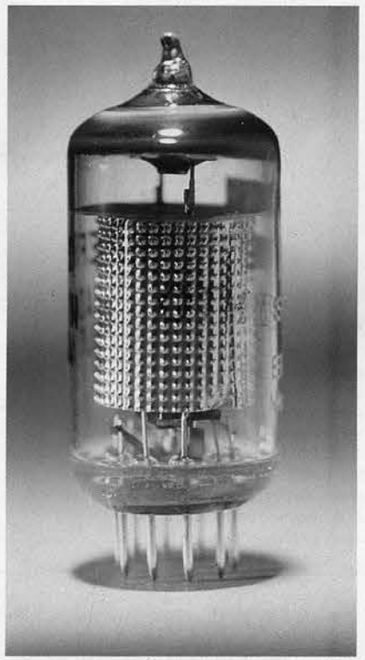

Svetlana's EF86 low-noise pentode was once common in European hi-fi and guitar amps.

High-end designers in the past relied on power tubes endemic in the late '50s and '60s, primarily 6550 and EL34 types. The arrival of single-ended triode amplifiers has encouraged wide use of the 300B and other primitive triodes using directly-heated cathodes.

In recent years, tubes have developed a poor reputation for reliability. Most of it seems the result of low-quality imported tubes, primarily Chinese in origin. A side-effect has been the veneration of new old stock [see Defining Terms, p. 28] U.S. and European tubes, of types that are still being manufactured but not by the original makers. Since each manufacturer has its own proprietary formula for cathode coatings and other materials, tubes of the same type but from different manufacturers often sound slightly different. Since the standards have already been settled as being new old stock types like the RCA black-plate 6L6GC and Telefunken smooth-plate 12AX7 [see Defining Terms, p. 28], those types of tubes have increased in value along with the vintage equipment they were used in originally, even if the tubes end up in new equipment. Some boutique guitar-amp makers and high-end firms deliberately equip their new production with scarce NOS tubes, charging the customer accordingly, while professing their aural superiority and limiting the sales of their product (and, perhaps, also ensuring the product's obsolescence when tube stocks run out).

Another general tendency has been for tubed amplifiers (of both guitar and high-end types) to be designed and built by technically unqualified people. As Transcendent's Rozenblit said, "Properly designed tube equipment is extremely reliable. I have repaired many pieces of tube gear from the late '50s or early '60s where all of tubes still worked. Usually, a filter capacitor dried out and failed. The poor reputation comes from basically two factors. One is that from about 1970 to about 1990, the quality of vacuum tubes went through the floor. With the resurgence of tube audio, very high-quality tubes are now being manufactured. The second reason is that many contemporary tube designers don't know what they are doing. They are not engineers, they are salesmen. Tubes are forgiving and easy to work with, which allows the less sophisticated to easily enter the marketplace."

Coming attractions

A major stumbling block to the wide use of tubes, especially in consumer audio electronics, is the fact that most tube-equipped audio devices are made in the United States or Europe in small quantities, and tend to sell for high prices. A change in this situation may be presaged by the arrival in the high-end market of many low-cost amplifiers and preamps made in offshore factories. Firms such as Antique Sound USA Co., Seattle, Wash.; Alpha Audio Laboratory, Belmont, Calif.; and Jolida Inc., Annapolis Junction, Md., have recently begun to import low-cost amps and preamps made by Chinese or Taiwanese factories. In the tubed guitar-amplification world, imported Asian-made products have yet to make a significant impact, although most inexpensive solid-state amps are Asian-made and a few tube amps are being exported from China. New Sensor Corp., of New York City, imports a line of guitar amps built for it in the Reflector factory in Saratov, Russia—these "Sovtek" amps have proven to be popular and affordable.

Solid-state designers have long

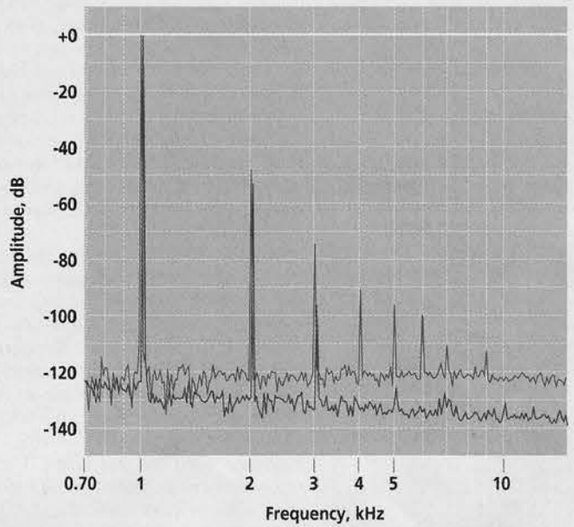

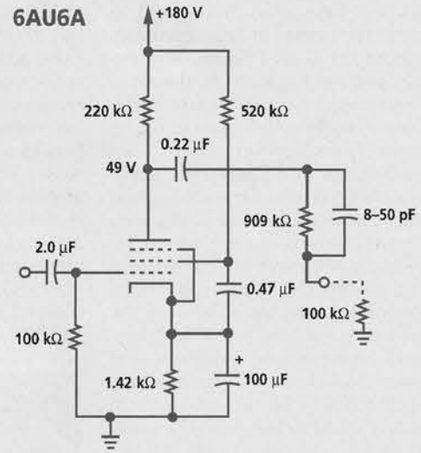

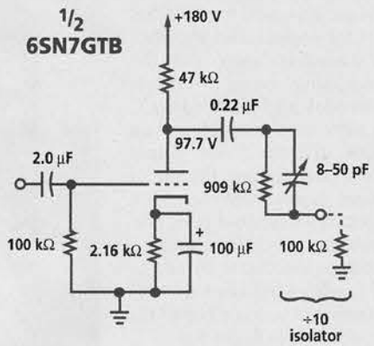

6AU6A pentode:
Noise floor is about 120 dB below the fundamental; second harmonic is 48 dB down [red curve, above]. Operating conditions were taken from the resistance-coupled amplifier tables in RCA tube manual RC-21, 1961, p. 438.

6SN7GTB medium-mu triode:
Noise floor is about 130 dB below the fundamental; second harmonic is 52 dB down [blue curve, above]. Operating conditions were taken from the resistance-coupled amplifier tables in RCA tube manual RC-21, 1961, p. 439. Note: the voltage gain of this device is much lower than that obtained with any of the transistors or the pentode.

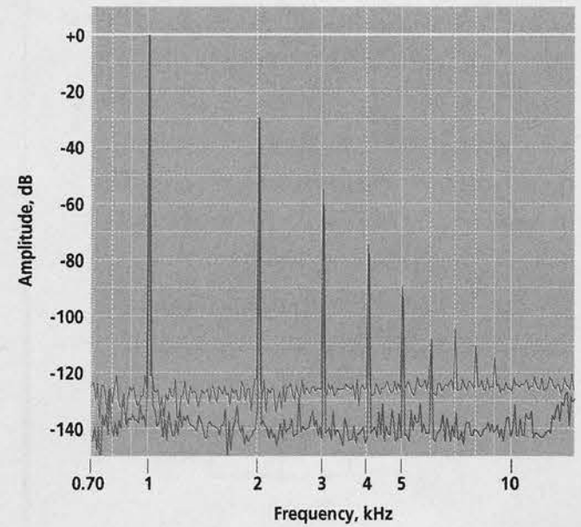

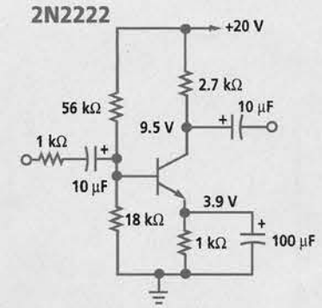

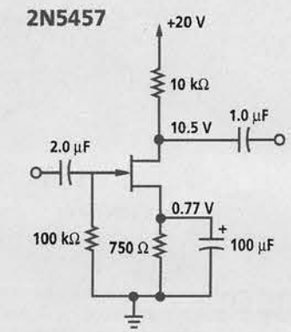

2N2222 low-voltage bipolar transistor:
The noise floor is about 125 dB below the fundamental; the second harmonic is –30 dB. The circuit was taken from the output stage of "High-Fidelity Preamplifier," p. 609 of RCA transistor manual SC-14, 1973, with a 2N2222 substituted for the (similar) 2N3242A. A 1-kΩ resistor was used to match the 20-Ω output impedance of the generator to the transistor.

2N5457 low-voltage junction FET:
Unlike the high-voltage MOSFET, the JFET has excellent noise performance (–140 dB) but poor distortion (second harmonic is only 30 dB down). Because of the lower I_{dss} of available junction FETs, the drain resistor was raised to 10 kΩ; the bias was adjusted to give about 1/2 V_{DD} at the output.

Distortion under test

Since much of the rationale for the continued use of tubes in audio equipment is based on distortion and noise, we decided to compare how several representative tubes and transistors performed in this regard. Using basic circuit designs in which these devices are typically used, we tested two tubes against four types of transistor—respectively, a medium-mu triode and a pentode against a low-voltage bipolar transistor, a low-voltage junction FET (JFET), a high-voltage bipolar transistor, and a high-voltage MOSFET. The figures show the distortion and noise spectra of each device.

All the measurements were made with an Audio Precision System 2 with its analog oscillator set to 1 kHz. The oscillator output level was adjusted to give an rms voltage of 2.00 V at the output of the test device. The output impedance of the oscillator was either 20 Ω or 600 Ω, depending on the device under test.

The test device was monitored by the System 2's fast Fourier transform (FFT) function using its 20-bit analog-to-digital converter running at 48 kilosamples per second. The FFT was synchronous (no windowing), and was averaged over 16 samples. The residual harmonics were at least 120 dB down. The input impedance of the System 2 was set to 100 kΩ. Both input and output were floating, with the test fixture separately grounded to the System 2.

In the vacuum tube test fixture, the filament voltage was dc, regulated to 6.3 V. The output of the tube was monitored through a 10:1 compensated divider so as to reduce ac and dc loading.

The summary of second-harmonic distortion levels follows:

- 6SN7GTB triode –52 dB
- 6AU6A pentode –48 dB
- 2N2222 low-voltage bipolar –30 dB
- 2N5457 low-voltage JFET –30 dB
- MJE2361 high-voltage bipolar –46 dB
- IRF822 high-voltage MOSFET –41 dB
- HS-11 transformer –90 dB

Although this is not intended to be an exhaustive examination of all available semiconductors or tubes, the resulting frequency spectra lead us to some conclusions that experienced audio designers have often remarked upon in the past.

- Transistors operating on low-voltage supplies tend to have higher spectral distortion components than tubes.
- If we go to high-voltage transistors, operating on supplies comparable to those of the tubes, the distortion

Continued on p.34

attempted to produce tube simulators, using solid-state analog circuits like diode clippers and compressors to produce transfer functions and distortion akin to those of tubed guitar amps. Although these products have attracted only a limited following to date, the recent appearance of solid-state amplifiers based on digital signal processing (DSP) and using physical modeling algorithms, has stirred some interest among serious musicians.

To quote Art Thompson, technical editor of *Guitar Player* magazine, San Mateo, Calif.: "Transistor amps have definitely come a long way towards their ultimate goal of sounding exactly like their tube-powered counterparts, but I think most pro players and industry people have realized that this is a futile objective...." As to the success of DSP guitar amps like the Line 6 products from Fast Forward Designs Inc., Culver City, Calif., Thompson said, "We've tested some impressive tube-simulation devices, and better ones are undoubtedly on the horizon."

In the professional audio market, the final frontier for vacuum tubes looks to be in the mixing console. This device is the heart of a working studio, serving as primary signal router, EQ and effects controller, and the tool to mix down multiple recorded channels to a stereo master music program. Mixers used in most studio settings are large and complex and often equipped with computer-controlled automated mix-down capability. Although expensive, large mixing desks are frequently based on low-cost op-amp ICs such as the 5534, and use electrolytic capacitors for coupling the audio signal from stage to stage.

Some recording engineers have found this scheme wanting, hence recent introductions of tubed mixers. Companies producing such mixers are Summit Audio, the UK's Manley Laboratories and TL Audio Ltd., the latter being the sole producer of full-size mixing consoles with tubes at this time. The market may expand in the future, as interest in audio-tube electronics grows.

The most interesting new development is the introduction since 1990 of new tube types specifically designed for audio applications. Russian, Slovakian, Serbian, and Chinese factories currently opt to imitate the popular audio tubes of past types, such as 6L6GC and 12AX7. Yet the market has been open to some new tube types not directly based on any U.S. or European tube or modifications thereof. These types have aroused some interest from original-equipment makers, even though they seldom fit existing equipment.

In the guitar and pro-audio markets,

Continued from p.33

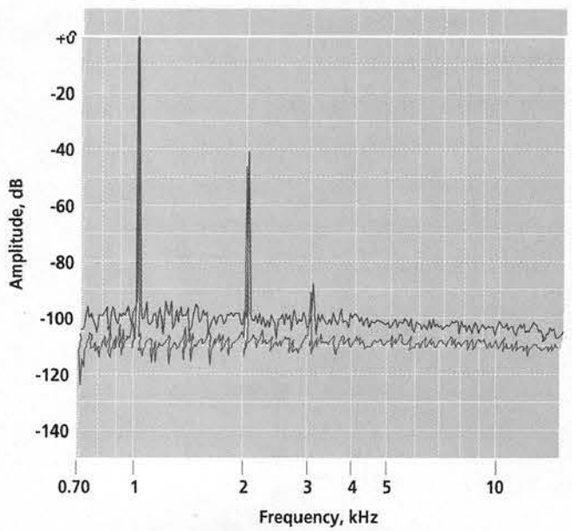

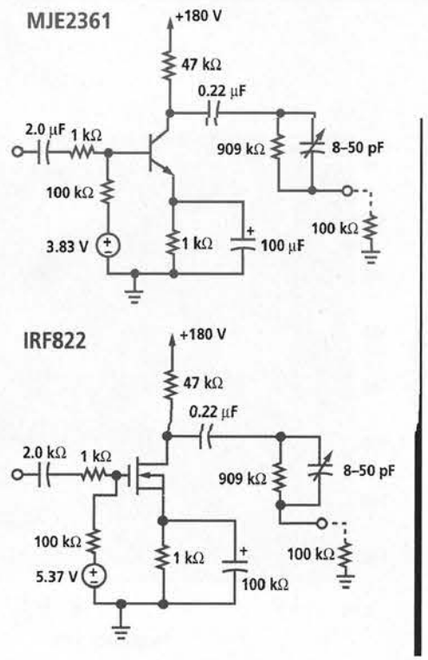

MJE2361 high-voltage bipolar transistor:
In this test, the transistor was substituted for the 6SN7GTB triode, and the bias was chosen to give the same operating point as the tube. A 1-kΩ resistor was used to match the 20-Ω output impedance of the generator to the transistor. The result: a noise floor at about –110 dB, and a second-harmonic level of –46 dB.

IRF822 high-voltage enhancement MOSFET:
When substituted for the 6SN7GTB, with bias adjusted to give the same operating point as the tube, the MOSFET exhibited excellent distortion characteristics, which were compromised by its noise floor of –100 dB—about 30 dB above the tube's. Second-harmonic distortion is 41 dB down, which is only 59 dB above the noise.

products are less objectionable. Unfortunately, the noise floor of such devices is much higher. The IRF822 was very triode-like in distortion yet suffered from a noise floor some 30 dB higher than that of the triode.

- No other active device possesses both the low distortion products and the low noise floor of the medium-mu triode—albeit at the expense of voltage gain.
- The distortion products of transformers are much lower than those of active devices, yet quite different in character. Note that the odd-order harmonic products tend to be higher in level than the even-order products—exactly the reverse of the tubes and transistors.

It should be obvious that these simple circuit designs can be improved upon, by using differential topologies with constant-current loads and negative loop feedback.

It should also be obvious that the same techniques can be applied to transistors or to tubes; and if this were done, the triode would continue to enjoy some advantages over the semiconductors—and the pentode, for that matter.

—E.B. with John Atwood

John Atwood is a consultant on tubed audio design and owns One Electron Co., Santa Clara, Calif.

new versions of classic power tetrodes and pentodes include, from the JJ/Teslovak Co., Cadca, Slovakia, the KT88S and E34LS, which are modified and uprated in power dissipation rating from their KT88 and EL34 prototypes. New high-power triodes, such as the SV811/572 series and 3CX300A1, have been introduced by Svetlana. Even more than other fields, the high-end market has seen an explosion of power triodes: the VV30B and VV52B from KR Enterprise Co., Prague, Czech Republic; Svetlana's SV811/SV572 series; the AV30B SL and AV62B SL from AVVT Technologies, Prague, Czech Republic; and many versions of the 300B from two different factories in China, two in Russia, and one in Slovakia—not to mention the revival of Western Electric and its resumed manufacture of the original 300B.

The KT90 beam tetrode, made by Ei Electronic, Nis, Serbia, has proved so popular for audiophile amps that a Chinese factory has even introduced its own version. Also winning a following in high-end audio are some Russian tubes unknown in the West until recently, such as the 6C33C-B from Electronpribor Ulyanov, Ulyanovsk, Russia. More new types are expected to be introduced, and some out-of-production types will be reintroduced, over the next several years.

Vacuum tubes enjoy an unshakable position in the design of guitar amplification. Their use in the recording studio and in home audio often seems like a fad, but it has very old roots and is therefore unlikely to disappear overnight, as fads do. Technical reasons for the use of tube electronics in some applications look solid and are well-defended both by professional designers and by the users, who define and drive the marketplace. So long as musical tastes demand them, tubed audio equipment and replacement tubes will be produced well into the next century, and probably thereafter. ◆

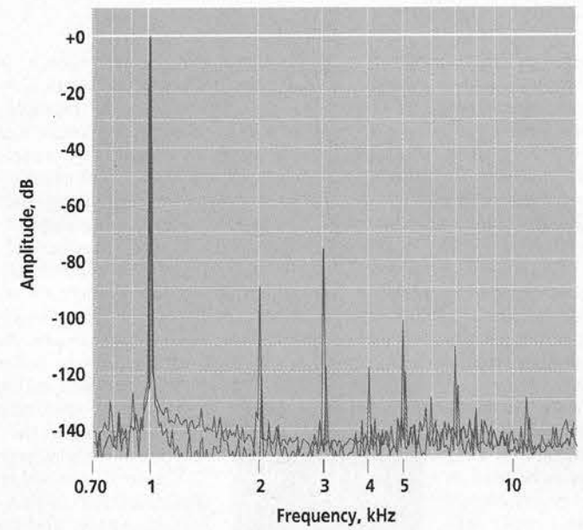

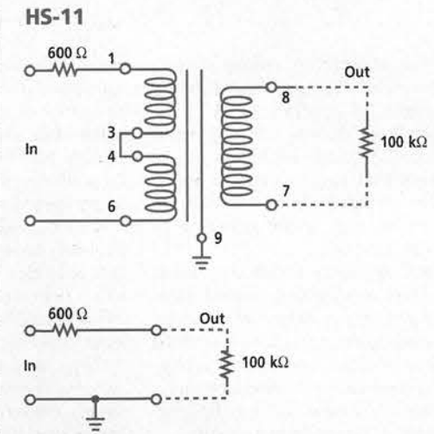

Triad HS-11 input transformer:
Source impedance was set to 600 Ω. The transformer was loaded by the 100-kΩ input impedance of an Audio Precision analyzer. This test was included because some professional audio experts commented on the unusual behavior of audio coupling transformers in tube circuits—specifically, that the odd harmonics tend to be stronger than the even ones. The HS-11 is typical of small input transformers used to couple a 600-Ω balanced line to a tube grid.

Residual noise plus distortion of the analyzer, with only a 600-Ω resistor in series, is at least 118 dB down.

To probe further

Well-written articles on the subjective and objective characteristics of tube audio electronics include: "Why tubes sound so good," by Doug Fearn, *Pro Audio Review*, January/February 1996, Vol. 2, no. 1, p. 15; "The grounded ear" Peter Sutheim's column in *The Audio Amateur*, Issue 3, 1980, p. 34; and "Tubes versus transistors—Is there an audible difference?" by Russell O. Hamm in *Journal Of the Audio Engineering Society*, May 1973, Vol. 21, no. 4, p. 267 (reprinted in *Glass Audio*, Issue 4, 1992, p. 16 on).

An unusual approach to testing for distortion products in power amplifiers is taken in "Spectral contamination measurement," by Deane Jensen and Gary Sokolich, presented at the 85th AES Convention, 3–6 November 1988 (Audio Engineering Society, New York City, 1988). Spectral distortion products of transistor amplifiers are compared, along with those from a McIntosh MC-30 tube amplifier, whose spectral plot is quite different from those of solid-state amplifiers.

In professional recording, tube equipment is a small but growing field. Recent articles about it include: "Tube processors—The outboard renaissance," by Loren Alldrin, *MIX* magazine, May 1997, Vol. 21, no. 5, p. 108; "A reader's guide to vintage gear," by Fletcher, *MIX*, November 1996, p. 84; "Retro-Active," by Michael Molenda, *Electronic Musician*, June 1995, p. 36; "The retro movement," by Sue Sillitoe, *Audio Media*, November 1994, p. 48; and "The vacuum tube rides again," by Walter Sear, *MIX*, May 1994, p. 24.

Textbooks on professional audio equipment design using tubes are a quite recent phenomenon. The most useful include *Principles of Power* and *The Ultimate Tone*, by Kevin O'Connor (Power Press Publishing Co., London, Ont., Canada, 1996); *Vacuum Tube Guitar And Bass Amplifier Theory*, by Tino Zottola (self-published, 1997); and Dan Torres' *Inside Tube Amps* (Sparpco Inc., San Mateo, Calif., 1996). An unusual reference book, with hundreds of schematic diagrams for tube-based music equipment is Aspen Pittman's *The Tube Amp Book*, edition 5 (Groove Tubes Inc., Sylmar, Calif., 1995).

Suitable for novices is *Beginner's Guide To Tube Audio Design*, by Bruce Rozenblit (Audio Amateur Press, Peterborough, N.H., 1997). All the books are available from Antique Electronic Supply, 6221 S. Maple Ave., Tempe, AZ 85283.

A taste of the fascinating and obscure world of "boutique" guitar amplifiers is afforded by Art Thompson's "20 mule duel: we wrangle a herd of new boutique amps," in *Guitar Player*, February 1997, Vol. 31, no. 2, p.118.

Plenty of publications intensively cover vacuum-tube audio electronic design. Their emphasis is usually on hi-fi audio, although material about guitar amps and professional studio electronics appears regularly. English-language publications include *Glass Audio* (Box 176, Peterborough, NH 03458) and *Vacuum Tube Valley* (1095 E. Duane Ave., Suite 106, Sunnyvale CA 94086).

Magazines that concentrate on high-end audio design include *Sound Practices* (Box 180562, Austin, TX 78718), *Ultra-High Fidelity* (Box 158, Cheshunt, Herts., EN7 6UH, UK), and *Valve* (Box 2786, Poulsbo, WA 98370).

Non-English tube-audio publications include:

- The Italian *Audion* (Piazza Madonna Aldobrandini 7, 50123 Firenze) and *Costruire Hi-Fi* (Via Toti 9, 20010 Bareggio, Italy).
- The Japanese *MJ Audio Technology* (Seibundo Shinkosha Publishing Co., 13-7, Yayoicho 1-chome, Nakano-Ku, Tokyo 164, Japan).
- The French *Musique et Technique* (Bureau de Depot 1050, Brussels 5, Belgium).
- The German *Hi-Fi Scene* (Dufourstrasse 165, CH-8008 Zurich, Switzerland).

About the author

Eric Barbour has been an applications engineer with Svetlana Electron Devices Inc., Portola Valley, Calif., since July 1996. His work involves testing and characterizing new vacuum-tube types and constructing and testing amplifier circuitry for Svetlana audio and RF tubes. Earlier, he was a senior technician and then an engineer with the U.S. Department of Energy, Intelligent Electronics Co., and Dionex Corp.

A staff editor of *Vacuum Tube Valley magazine*, Sunnyvale, Calif., since its founding in 1995, he also contributes to *Glass Audio* magazine, Peterborough, N.H.

Spectrum editor: Michael J. Riezenman