Gain and resistance values specified in keeBK module file.
keeBK7:
GK501-4 = .944E-3
RK501-2 = .895E+4

PARAMETERS:

| | |
|---|---|
| GK | .944E-3 |
| RK | .895E+4 |

# Knowles BK Analog Broadband Response

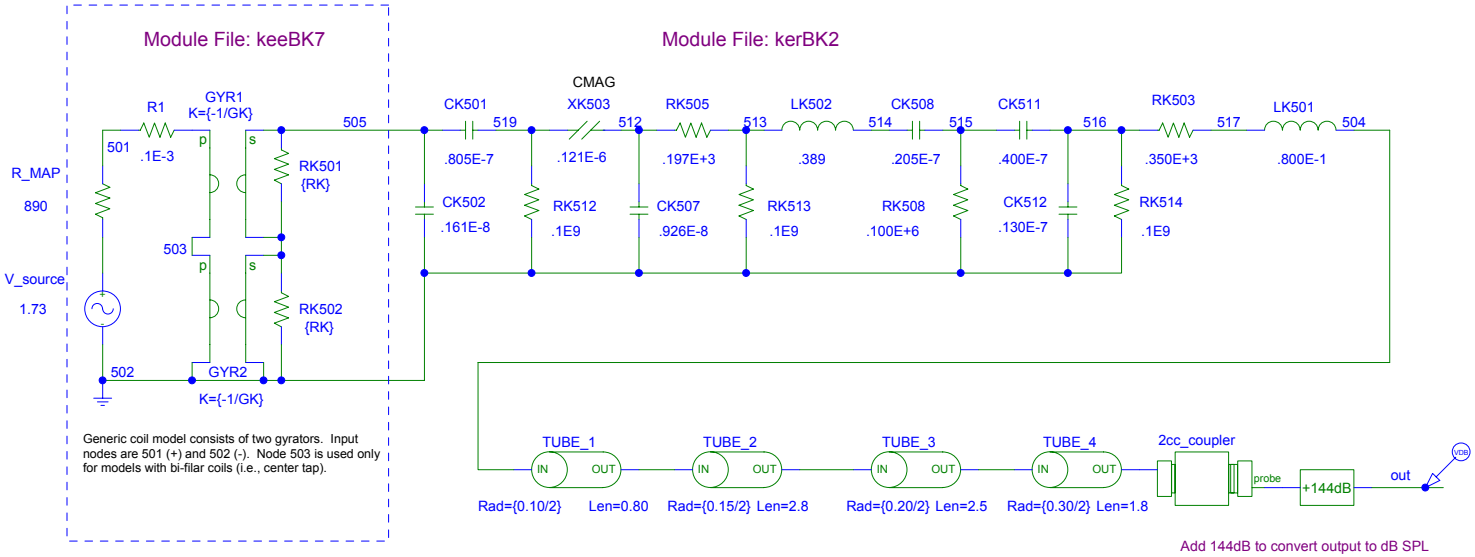


Generic coil model consists of two gyrators. Input nodes are 501 (+) and 502 (-). Node 503 is used only for models with bi-filar coils (i.e., center tap).

Add 144dB to convert output to dB SPL

Tubing and coupler specified in Knowles Sheet 2.1 for the BK-1888
[8mm x 1.0mm ID] + [28mm x 1.5mm ID] + [25mm x 2.0mm ID] + [18mm x 3.0mm ID]

GYRATOR MODEL
Gyrator between node pairs (1,2) and
(3,4) having a gyrator constant K

```
.SUBCKT GYR-X 1  2  3  4  PARAMS:K=1
R1  1  2   9E+12
R2  3  4   9E+12
R3  2  3   9E+12
G1  1  2   VALUE = {V(3,4)/K}
G2  3  4   VALUE = {-V(1,2)/K}
.ENDS
```

```
*CMAG models a capacitive impedance in series with a
*resistor to create a 45 degree phase angle at all
*frequencies.  The net impedance varies as 1 over the
*square root of freqency.

*CMAG is the capacitor's value at 1 kHz.
*Also called VRMAG, VCMAG in older models

.SUBCKT CMAG-X  1   2   PARAMS:CMAG = 1
R1  1   2   1E+12
G1  1   2   FREQ   {.707*V(1,2)*(CMAG*6282)} =
+ (20,-17,45)
+ (20000,13,45)
.ENDS
```


Knowles Electronics LLC
1151 Maplewood Drive
Itasca, IL 60143
(630) 250-5100


Page Size: A

Revision: 9 April 2007 Page 1 of 1