Gain and resistance values specified in module file.
keewbfkHFD4:
GK501-4 = .170E-2
RK501-2 = .6916E+4

PARAMETERS:

GK	.170E-2
RK	.6916E+4

Knowles WBFK HFD Analog "Tweeter" Response (High Frequency Driver)

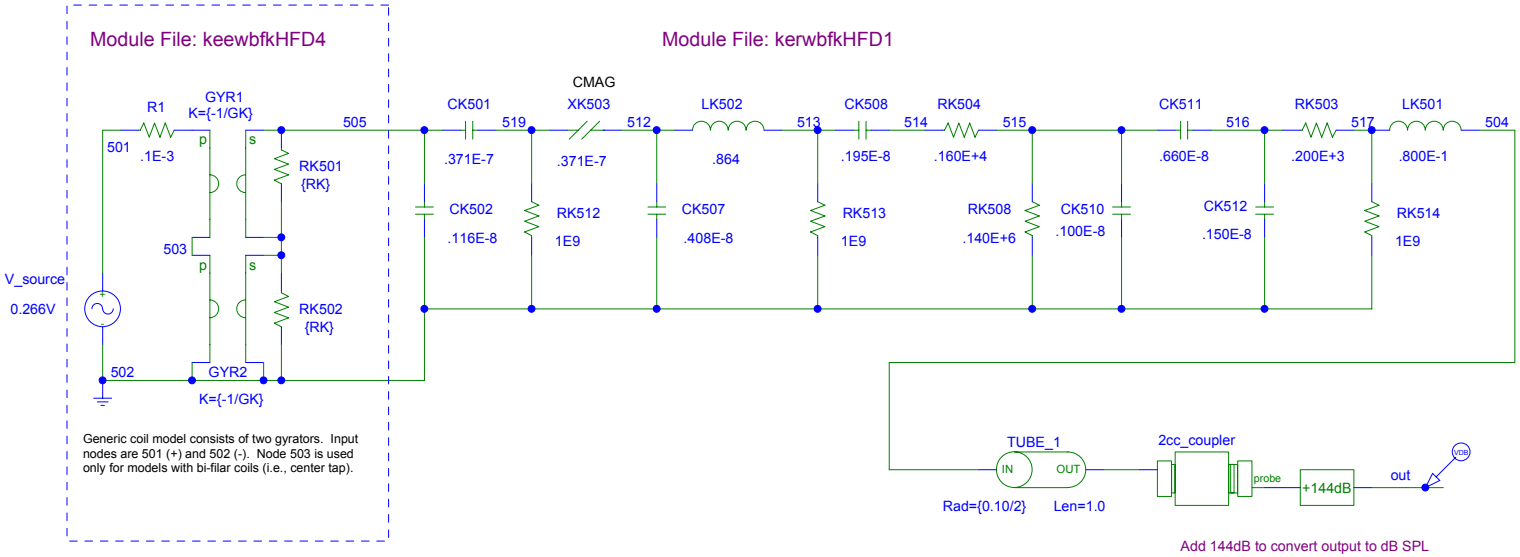

GYRATOR MODEL
Gyrator between node pairs (1,2) and
(3,4) having a gyrator constant K

```
.SUBCKT GYR-X 1  2  3  4  PARAMS:K=1
R1  1  2   9E+12
R2  3  4   9E+12
R3  2  3   9E+12
G1  1  2   VALUE = {V(3,4)/K}
G2  3  4   VALUE = {-V(1,2)/K}
.ENDS
```

*CMAG models a capacitive impedance in series with a
*resistor to create a 45 degree phase angle at all
*frequencies. The net impedance varies as 1 over the
*square root of freqency.

*CMAG is the capacitor's value at 1 kHz.
*Also called VRMAG, VCMAG in older models

```
.SUBCKT CMAG-X  1   2   PARAMS:CMAG = 1
R1  1   2   1E+12
G1  1   2   FREQ   {.707*V(1,2)*(CMAG*6282)} =
+ (20,-17,45)
+ (20000,13,45)
.ENDS
```

Tubing and coupler specified in Knowles Sheet 2.1
[10mm x 1.0mm ID]

Knowles Electronics LLC
1151 Maplewood Drive
Itasca, IL 60143
(630) 250-5100

Page Size: A

Revision: 9 April 2007 Page 1 of 1